McDaniel Metals, Inc
1318 Buschong
Houston, TX 77039
281 987 8400
281 987 9494 fax
www.mcdanielmetals.com

PIPE JACK STAND

Customer	
Ship To	
Project	
P O Number	
Approved By	

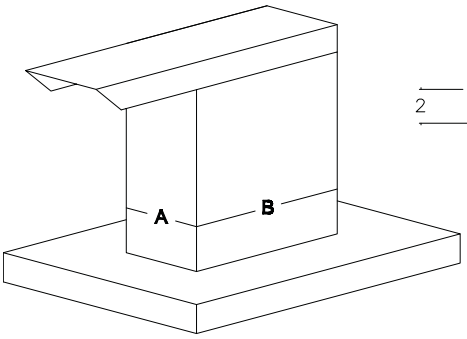

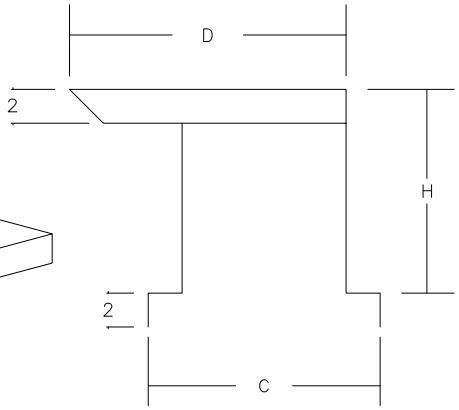

Standard Features

- 20 Gauge Galvanized Steel
- Continuous Welded Seams
- Removable Hood
- Flanges for Curb Mount

Options

- Heavy Gauge Galvanized
- Aluminum
- Stainless Steel
- Self Flashing

SPECIFICATIONS AND DIMENSIONS							
QTY	A	B	C	D	Height	TAG#	Options