25FD180240 AND 25MFD180240
25% MANUAL AND MOTORIZED
FRESH AIR DAMPER

APPLICATION

Most building codes require a certain amount of fresh air be introduced into the interior space. Use of fresh air dampers on HVAC equipment is an inexpensive way to allow fresh air into the building. McDaniel Metals offers both a manual and motorized fresh air damper to fit Goodman light commercial packaged equipment. The manual fresh air damper is installed and fixed in place to allow a certain amount of fresh air to circulate at all times. The motorized fresh air damper includes a small two position actuator that opens the damper when the indoor blower is running and closes the damper when the blower turns off.

MANUAL FRESH AIR DAMPER INSTALLATION

1. Remove the damper assembly from its container and inspect for damage or shortages.
2. Locate and remove the large evaporator access panel on the end of the unit and discard. Retain the screws for step 3.
3. Attach the damper to the side of the machine using the screws from step 2 and weatherproof using silicone or other approved sealant.
4. Loosen the wing nut on the damper handle and adjust the damper position until the required amount of fresh air is entering the space.
5. Tighten the wing nut to secure the damper.

MOTORIZED FRESH AIR DAMPER INSTALLATION

1. Remove the damper assembly from its container and inspect for damage or shortages.
2. Locate and remove the large evaporator access panel on the end of the unit and discard. Retain the screws for step 3.
3. Attach the damper to the side of the machine using the screws from step 2 and weatherproof using silicone or other approved sealant. Ensure that the wires from the motor wiring harness do not impede the operation of the damper and that they are not pinched between the panel and the side of the unit.
4. Feed the wiring harness to the vicinity of the filter access panel and locate the economizer plug supplied with the unit.
5. Remove the zero from the unit economizer wiring harness molex plug and plug in the motorized damper. Retain the zero plug in a secure location for the future.
6. Replace the filter access panel.

DETERMINING MANUAL DAMPER SET POINT

While it is possible to estimate the amount of fresh air by visually adjusting the manual fresh air damper, a more accurate determination can be made using a digital thermometer and the equation below.

(To X OA) + (Tr X RA) = Tm
To = Outdoor air temperature
OA= Percent of outdoor air
Tr = Return air temperature
RA= Percent of return air
Tm= Resulting mixed air temperature
Example:

Fresh air required is 10% outdoor air.
Outdoor air temperature is 60 degrees F.
Return air temperature is 75 degrees F.

(0.1 X 60) + (0.9 X 75) =
6.0 + 67.5 = 73.5

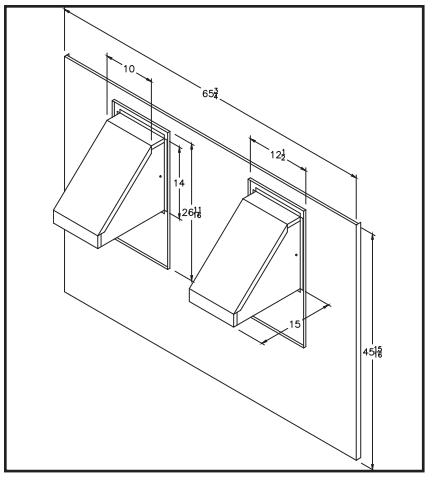

Mixed air temperature will be 73.5 degrees F when the OA is 60 degrees F and the RA is 75 degrees F with 10% outdoor air.